NOTE:

1 - INVERT DIMENSION FROM TANK I.D.
2 - TANK HAS IAPMO LABEL.
3 - NOMINAL TANK WEIGHT: 800 LBS.
4 - TANK EXTERIOR SURFACE FINISH WITH U.V. PROTECTION.

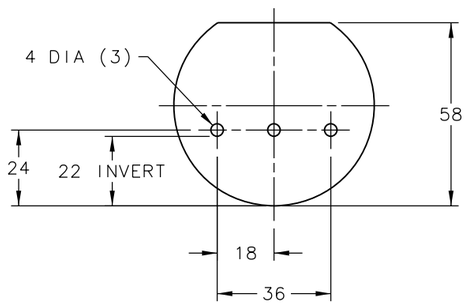

BAFFLE DETAIL

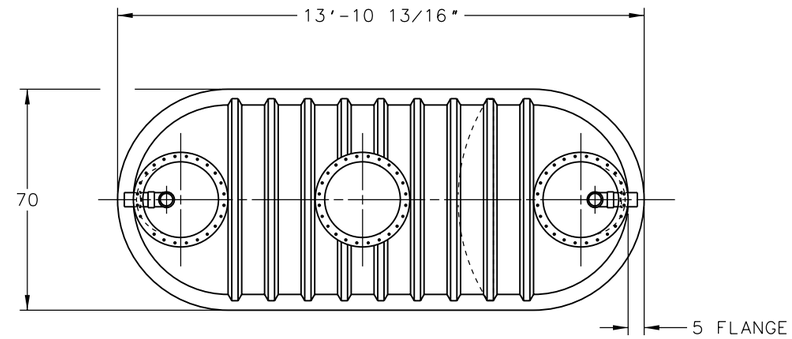

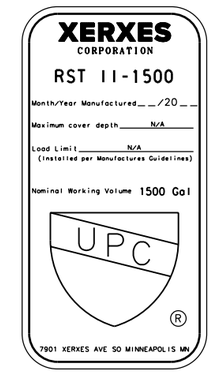

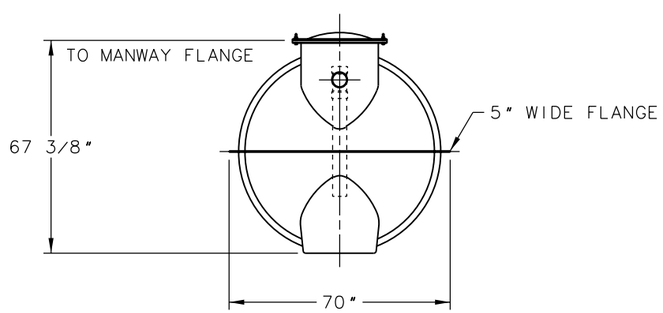

END VIEW

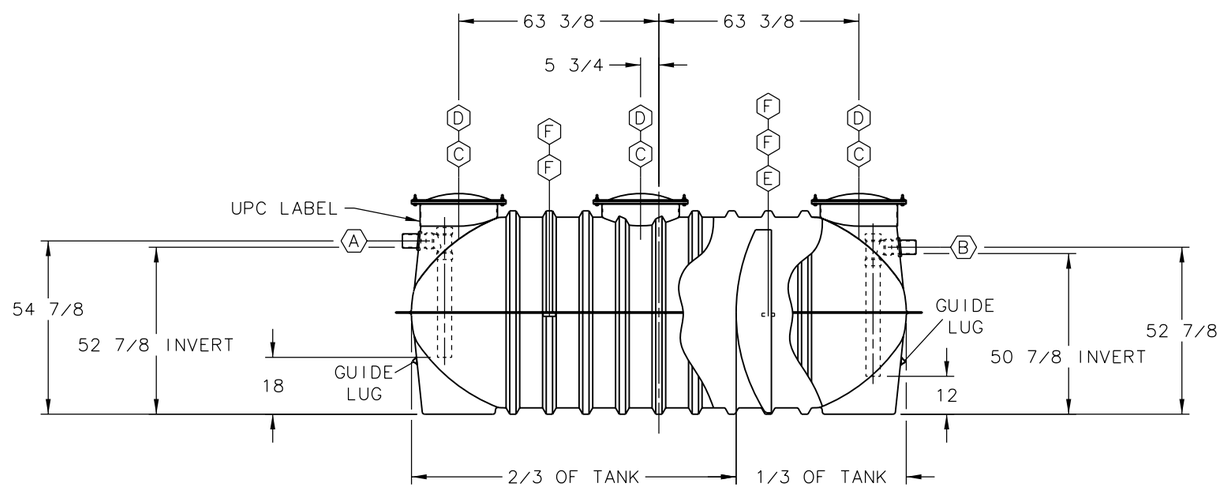

ITEM	QTY	DESCRIPTION
A	1	4"DIA SCH 40 PVC INLET PIPE WITH INTERNAL SANITARY TEE & PIPES
B	1	4"DIA SCH 40 PVC OUTLET PIPE WITH INTERNAL SANITARY TEE & PIPES
C	3	24"DIA MANWAY WITH FRP COVER (30" O.D. FLANGE)
D	3	S.S. STUD BOLT RING FOR 24"DIA MANWAYS (30" OD FLANGE)
E	1	7/8 PLATE BAFFLE (22" INVERT) WITH 3 - 4"DIA HOLES
F	4	LIFTING LUG (2 ON EACH SIDE OF TANK)

0	REVISION DESCRIPTION -					
DRN -	DATE -	CHK'D -	DATE -	APPR'D -	DATE -	

XERXES
CORPORATION

DRN DAG	DATE 2-26-19	TITLE RST-11 AST-H CAP. 1,500 GALLONS MODEL G1-5-1500-UPC-AST EP WEST
CHK'D	DATE	
APPR'D	DATE	
SALES MANAGER David Holmes	DR. SIZE D	DR. NUMBER 662-906 / REV 00
	SCALE: 1/2"=1'-0"	SHT 1 OF 1

INDUSTRY TYPE: M210 PLUMBING ENGINEERED SOLUTIONS